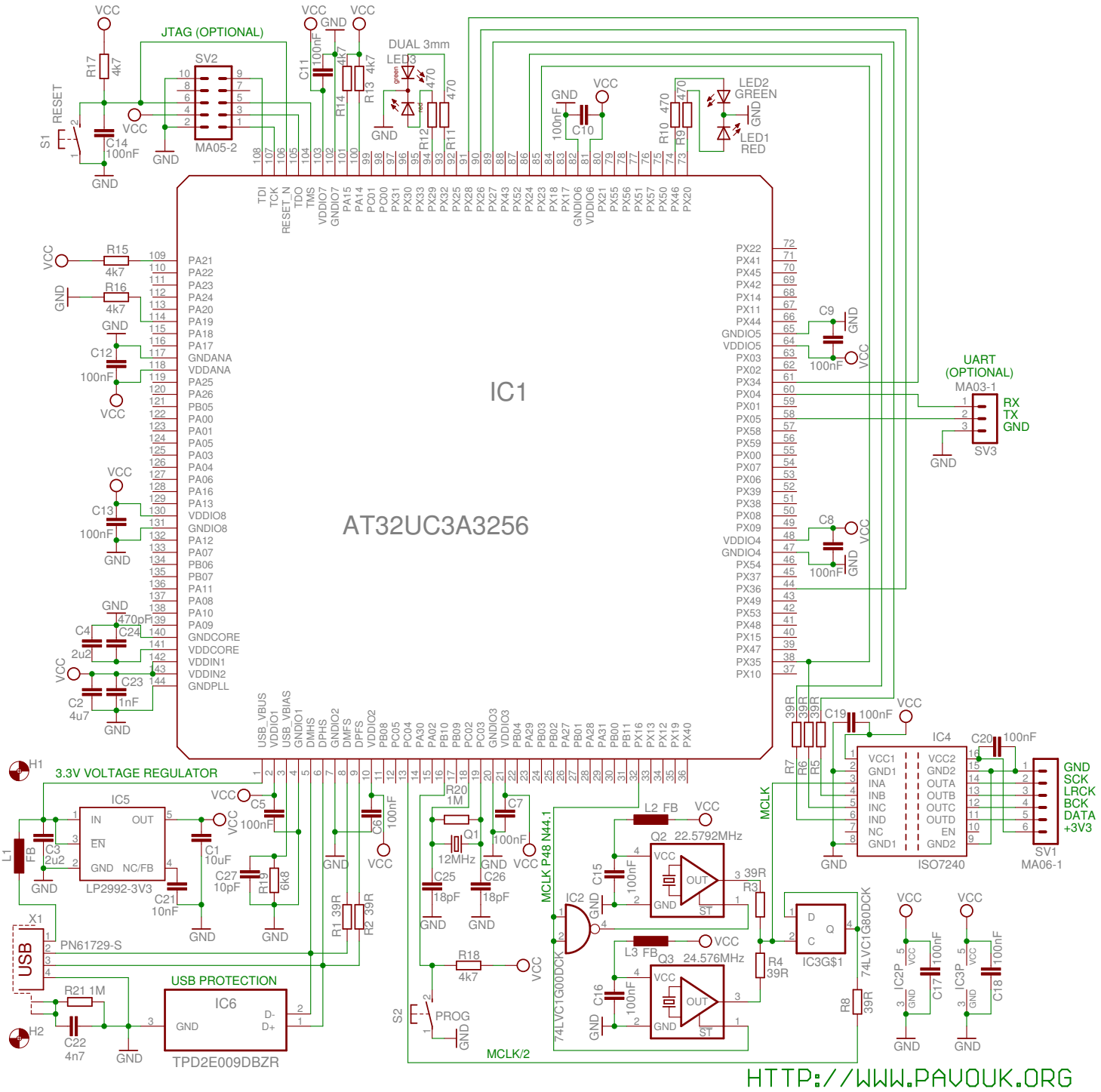AT32UC3A3256 USB-I2S 1.0 AUDIO-WIDGET COMPATIBLE